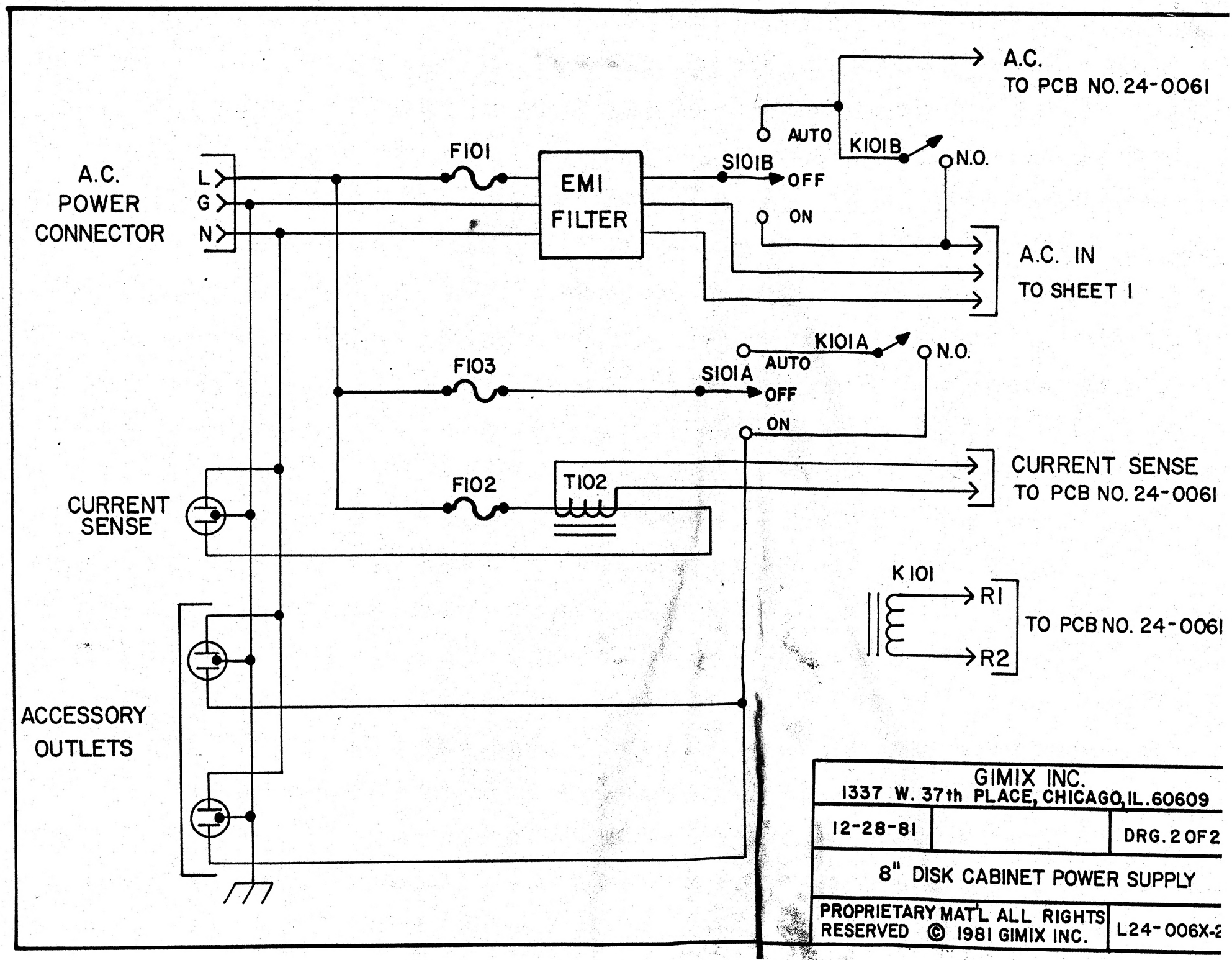
A.C.
TO PCB NO. 24-0061
AUTO
K101B
N.O.
S101B
OFF
ON
F101
EMI
FILTER
A.C.
POWER
CONNECTOR
L
G
N
A.C. IN
TO SHEET 1
K101A
N.O.
AUTO
S101A
OFF
ON
F103
F102
T102
CURRENT SENSE
TO PCB NO. 24-0061
CURRENT
SENSE
K101
R1
R2
TO PCB NO. 24-0061
ACCESSORY
OUTLETS
GIMIX INC.
1337 W. 37th PLACE, CHICAGO, IL. 60609
12-28-81
DRG. 2 OF 2
8" DISK CABINET POWER SUPPLY
PROPRIETARY MAT'L ALL RIGHTS RESERVED © 1981 GIMIX INC.
L24-006X-2